Nano Environmental Technology

SIL2

Innovative Gas Sensing

CYBER 4-20mA

Smart gas sensing transmitters

Cyber® Transmitter for flammable, toxic, oxygen and refrigerants gas detection using catalytic, electrochemical cell and IR technology Cyber® Head – Transmitter enclosed in ATEX certified head

innovative gas sensing

1. Introduction

The *4-20mA Cyber® transmitter* is a microprocessor based product, designed for gas sensing applications.
It may be used for toxic gas detection, using electrochemical cells, and for flammable gases, using catalytic or infrared gas sensors.
The raw signal input from the sensor is processed by the microprocessor, which also stores sensor's information.
The readout data is available both in analogue and digital format. Information such as alarm thresholds, fault conditions, calibration data etc are available in the microprocessor's registries.
The *4-20mA Cyber® transmitter* version is a complete transmitter, designed to provide the standard industrial 4-20mA output and serial line RS485. This device has been designed for industrial applications.
It should be accommodated in an appropriate case, provided with connection facilities and basically is ready to be used.
The main features of the 4-20mA Cyber are as follows:

- powered at +12V or +24V
- standard 4-20mA output
- RS485 serial communication
- Fault and Alarm thresholds TTL programmable outputs,
- external LED output.
- 5V power supply output for other devices (ex.: calibration keypad)

2. Operation

General description

The *4-20mA Cyber® transmitter* device consists of three overlapped boards. The first board is different for each sensor technology, one for catalytic sensors, another for electrochemical sensors and a third version for the IR sensors.
The second and the third boards are common for all versions, containing the microprocessor, the power supply and the standard outputs in 4-20mA and RS485.

Versions

The version designed for catalytic sensors will be used for the detection of flammable gases. The whole range of N.E.T catalytic single header and twin sensors may be fitted on this board.
The resulting device will monitor a flammable gas in range 0-100%LEL.

Version designed to accommodate the electrochemical cells may fit both 7 series and 4 series electrochemical cells able to detect toxic gases and oxygen.

Version designed to accommodate infrared sensor is able to monitor a wide range of hydrocarbons, toxic and refrigerant gasses.
Detection range depends on the sensor fitted.

Standard applications cover:
•Toxic gasses (ppm range; CO_2 also in %vol)
•Oxygen (%Vol range)
•Hydrocarbon gases (0-100 %LEL or 0-100 %Vol ranges)
•Refrigerant gases (0-2000 ppm or 0-100 % LEL ranges)

Contact N.E.T to evaluate feasibility of specific gases.

Optionally, the electronic boards may be fitted inside an ATEX approved stainless steel head named *Cyber® Head* device.

The device should be powered between 12V and 24V.

A number of versions of the device are available, depending on the gas sensor mounted.
The various options are presented in the drawings of Chapter 6 - Mechanical specifications.

As signal output there are featured two options:
- Standard 4-20mA current source type,
- Standard RS485 serial line featuring a digital communication in standard ModBUS

Analogue current 4-20mA output

The *4-20mA Cyber® transmitter* features a standard industrial 4-20mA output in source current version. The output is calibrated so that the readout is 4mA at zero gas and 20mA at full scale.

RS485 serial line

The serial communication output is a standard industrial RS485 and enables digital communication with a microprocessor system if present, in standard ModBUS protocol.
A maximum number of 64 devices may be installed on the same line, by setting different addresses.

Cyber is pre-calibrated, keeping record of the following basic information written in the Microprocessor's memory:
- serial number
- Calibration date
- Zero value
- Span value
- Alarm thresholds

All of the above is written in registers and is available for reading using the digital communication.

Other outputs available in TTL:

- 3 Alarm thresholds
- Fault condition
- Sensor end of life as fault (optional depending on the application)

All the above TTL outputs are open collector outputs (maximum 10mA) that should be used as low power driving signals, and cannot be used to drive directly a relay. Digital levels of these output are between 0V and 5V. These signals are normally at 5V and switch to 0V in case of fault or alarm conditions.

Digital communication

Standard Communication speed is 9600bps and communication parameters are: No parity,8 bit data ,1 bit stop.

The A and B voltage limits are as follow:

The A and B receiver input forces a high receiver output when V(A) ≥ [V(B) + 200mV]. V(A) ≤ [V(B)– 200mV] forces a receiver output low. Receiver inputs A and B are protected against voltage faults between ±60V. Receiver input thresholds are guaranteed between –200mV < VTH < 0. Receiver outputs are guaranteed to be in a high state for 0V inputs.

Serial communication protocol is available on request.

Temperature compensation

As standard, the board for the electrochemical cells version is provided with a thermistor calculated to apply temperature compensation for the main sensor.
Infrared sensors are temperature compensated internally.
The O2 sensor is not temperature compensated as the drift in temperature may be ignored.

Auto-zero

In the device's software a special function is implemented to monitor the zero value shift. This value may vary due to many factors and it is important that the readout curve always follow the sensor behaviour correctly.
If there is an upward shift, every 30 minutes a check-up is performed automatically. If the drift is below 2% of the full scale value, it will be zeroed, otherwise it will be shown as readout.
Nevertheless, the auto-zero is stopped if the sum of the auto-zeroes reaches 5% of the full scale value. In this case, the real value will be shown and treated as gas presence.

The same for a downward shift: every 3 minutes a check-up is being executed. As above, should the drift be below 2% of the full scale value, it will be zeroed.
In this case, if the drift is leading to a readout touching 700mV, a Fault condition will be activated.

Calibration

By default the board is factory calibrated no matter the sensor provided, with the alarm thresholds set at 10/20/30% of the full scale value, for Alarm 1/2/3 respectively.
Calibration of the cyber is possible using three different methods:

- By software, provided with the Cyber calibration board.
- By calibration keypad, directly connected to the Cyber device.
- By digital communication protocol

In the first case the assembly will be connected through the calibration board to a serial port of the PC. For more details see the setup SW manual.

3. Field of use

The *4-20mA Cyber® transmitter* device is a component, designed to be used for the detection of flammable gases, vapours, mists and/or combustible particles as well as for toxic atmospheres, lack of oxygen and refrigerants leakage.
The device has no IP protection, so this should be taken care during the instrument design.
In case of need, N.E.T. can provide IP65 heads.
The device is not certified in any way for classified atmospheres.
The *4-20mA Cyber® transmitter* device should be certified by the instrument maker, together with the gas detector it will be part of, if there is the necessity to be use it in classified areas.

For this kind of applications as an option, is available an ATEX certified head and therefore the device becomes a *Cyber® Head.*
The *Cyber® Head* is also a component, but it is certified for being used in classified areas according to the ATEX directive.

4. Standards

The *4-20mA Cyber® transmitter* device was designed in consideration to the following standards:
EN50194, EN50291.

The *Cyber® Head* is conform with the following standards:
EN60079-0 (2006), EN60079-1 (2004), EN61241-0 (2006), EN61241-1 (2004)

5. Technical specification

Technical specifications		
Sensing element		
Electrochemical cell	Carbon monoxide	NT-CO-PL1000, NT-CO-SLI1000
	Hydrogen Sulphide	NT-H2S-PL100
	Ammonia	NT-NH3-PLxxxx
	Nitrogen Dioxide	NT-NO2-PL30
	Other toxic gases available on request	
Catalytic sensor	single header catalytic sensor, type NP-xxSHM, NP-AHSHM; others catalytic sensors available on request	
Infrared sensor	Hydrocarbon gases, CO2, and Refrigerants	
Measurement range	Electrochemical cell	- Depending on sensor specification
	Catalytic sensor	- 0-100% LEL
	Infrared sensor	- Depending on sensor specification
Power supply	+12 VDC or +24VDC	
Current consumption	On board sensor	Current consumption
	Electrochemical cells	28mA @ 12V, 26mA @ 24V
	NP-17SHM	80mA @ 12V, 50mA @ 24V
	Infrared	60-90mA @ 12V, 35-55mA @ 24V
Visual indications	LED output available for status information	
Analogue output	4-20mA output - current source	
Digital outputs	RS485 - MODBUS protocol 3 threshold alarms - TTL outputs FLT signal – TTL output	
Auto zero routine	Zero drift compensation	
Sensor information	Serial number Calibration date Span factor Alarm thresholds	
Accuracy	Depending by the sensor element	
Repeatability	Depending by the sensor element	
Digital to analogue error	±2%f.s	
Warm-up time	90 seconds	
Stabilization time	Depending by the sensor element	
Response time	Depending by the sensor element	
Storage temperature	Electronic boards between –40°C and + 60 °C	
	Sensor's element depends by the sensor itself	
Operating tempera-ture	Depending by the sensor element	
Humidity range	20-90 % Rh / 40° C	
Pressure range	90-110 KPa	
Flow Rate	0.1 – 0.5 l/min	

6. Mechanical specifications

Figure 6.1

Single header industrial catalytic sensor for combustible gases

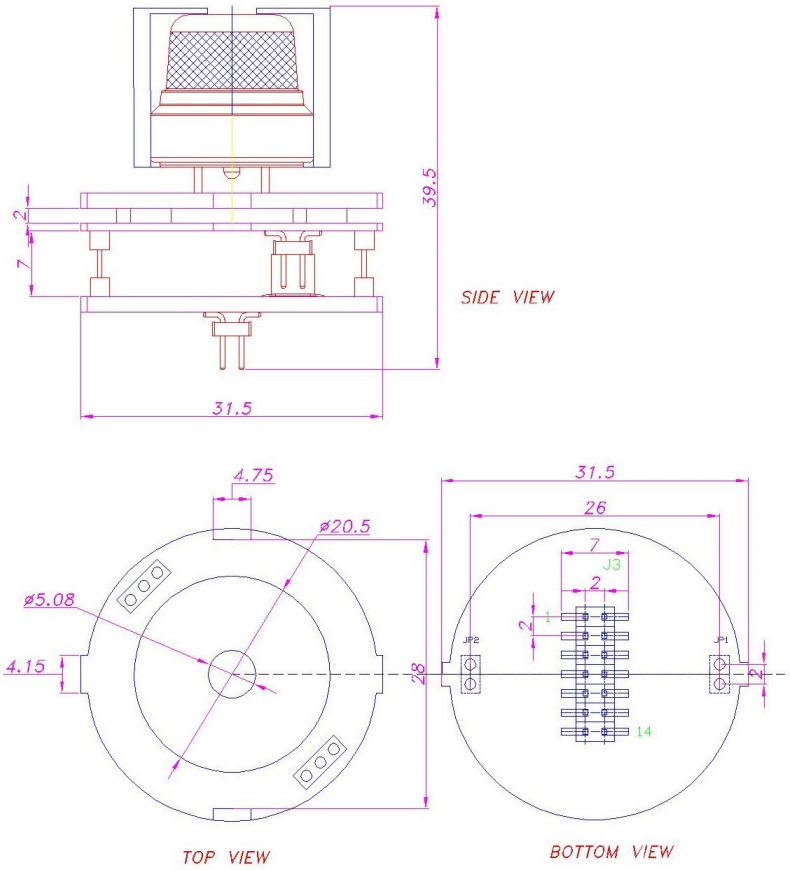

Figure 6.2

Twin industrial catalytic sensor for combustible gases

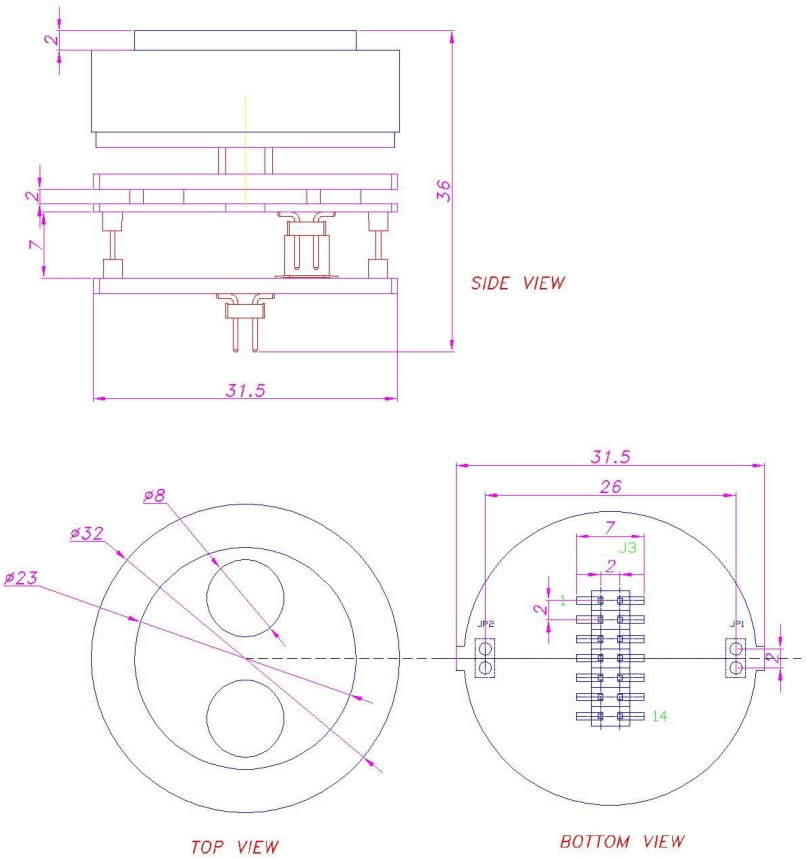

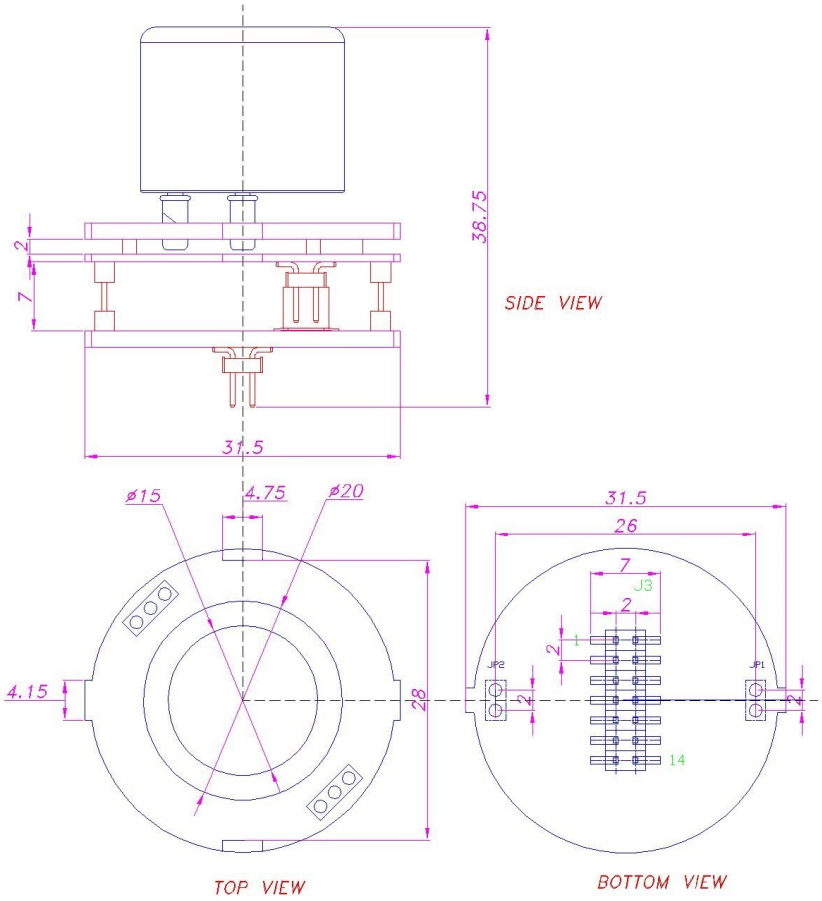

Figure 6.3

Electrochemical cell, 4 series type, for toxic gases detection

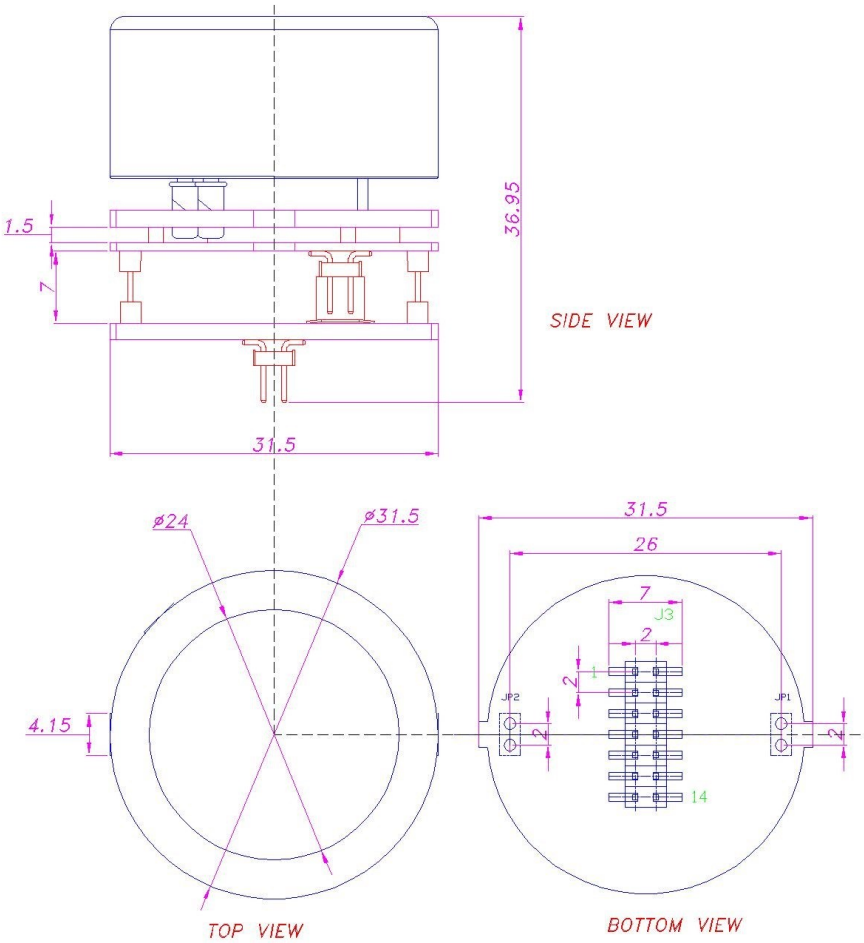

Figure 6.4

Electrochemical cell, 7 series type, for toxic gases detection

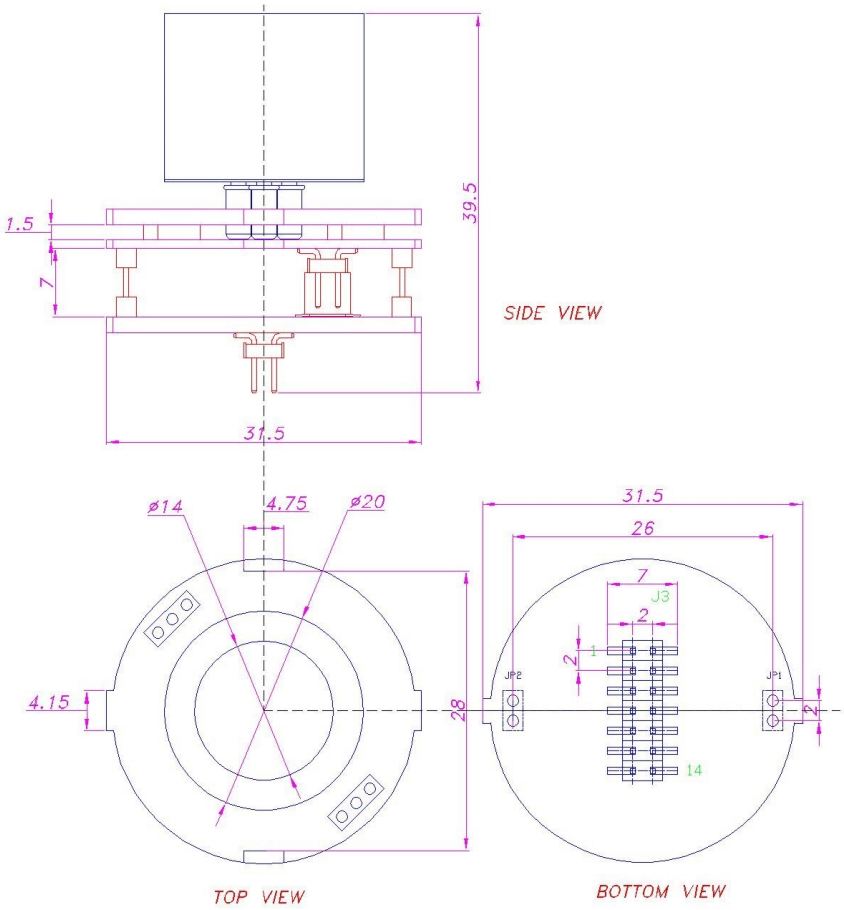

Figure 6.5

Infrared sensor , 20mm version type, for toxic and hydrocarbon gases detection

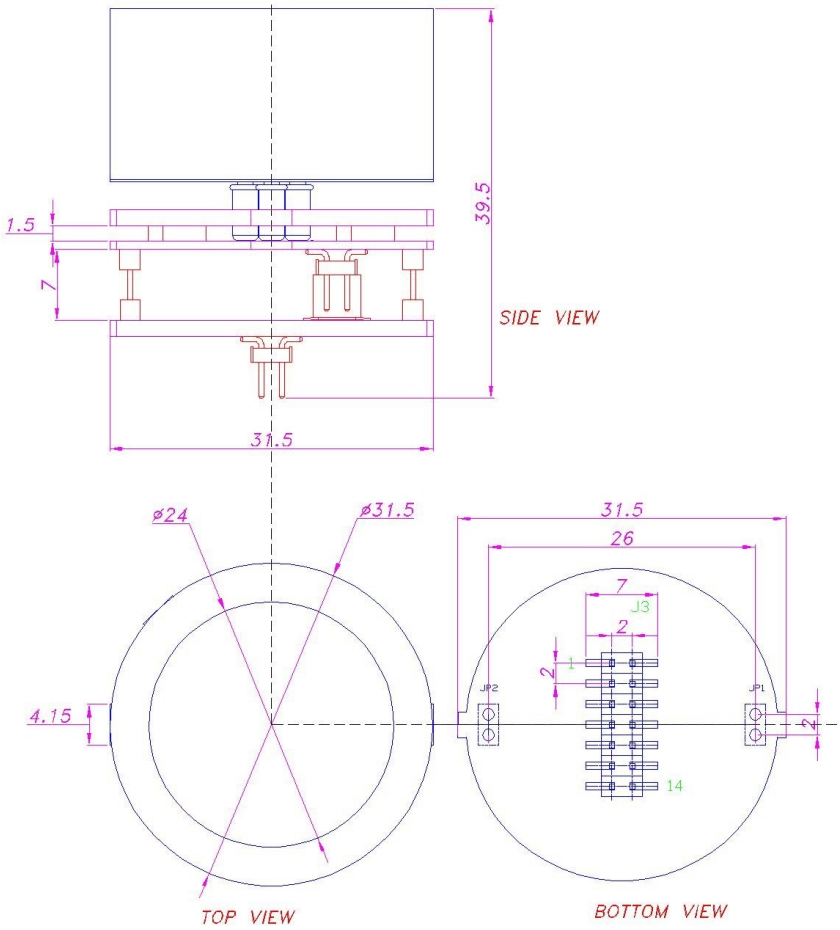

Figure 6.6

Infrared sensor , 32mm version type, for toxic ,hydrocarbon and refrigerant gases detection

7. Installation and electrical connections

4-20mA transmitter

4-20mA Cyber transmitter has been designed to be used as part of a gas detection instrument. It should be mounted in an appropriate case or in a detection head, provided with power supply unit between 12V or 24V.

*PIN-**OUT***

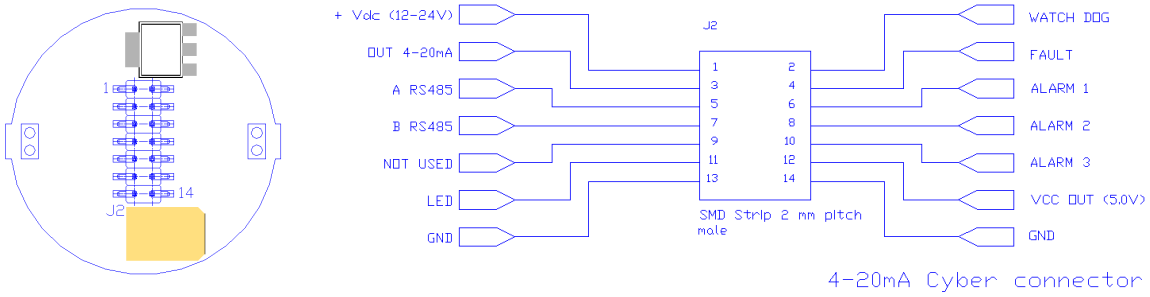

Figure 7.1. 4-20mA board connector and overview.

Signals on the board pin-out according to the drawing above:

PIN 1.	VDC (12-24V)	- Power supply 12-24V(1).
PIN 3.	OUT 4-20mA	- Proportional current output 4-20mA (2;5).
PIN 5.	A RS485	- A connection to RS 485.
PIN 7.	B RS485	- B connection to RS 485.
PIN 9.	NOT USED	
PIN 11.	LED	- LED output for an external LED of 5-10mA (3).
PIN 13.	GND	- Ground connection.
PIN 2.	WATCH DOG	- repeats the internal watch dog of the microprocessor. Normally stays in logical level "1". Switches to "0" should the watchdog activates.
PIN 4.	FAULT	- TTL output. Normally "1", goes to "0" in case of fault / under-scale / over-range.
PIN 6.	ALARM 1	- First Alarm level (4). TTL output, normally "1", goes to "0" in case of alarm level 1 exceeding.
PIN 8.	ALARM 2	- Second Alarm level (4).
PIN 10.	ALARM 3	- Third Alarm level (4).
PIN 12.	VCC (5.0V)	- Voltage supply output (current limit 100mA).
PIN 14.	GND	- Ground connection.

NOTES:

(1) The power supply may be at any level between 12V and 24V limited as minimum 10V and maximum 30V.
(2) The current output is of source type. To make the calibration of the 4-20mA output, make sure a 200 Ohm resistor is connected between PIN 3 and GND for the 4-20mA Cyber transmitter, or between the blue wire and GND (pin5 of the cable connector and pin 4 respectively).
(3) LED output to be used for driving an external LED giving information about the device status.
(4) By default the three alarm levels are set as 10/20/30% Full Scale respectively for ALARM 1/2/3.
(5) The maximum values of 4-20mA Loop Resistance, for Cyber Transmitter at different power supply voltage are:
From 12V up to 15V: 330 Ohms (with a maximum loop current of 24mA).
From 15V up to 30V: 500 Ohms (with a maximum loop current of 24mA).

Cyber head

Cyber head has been designed to be used as part of a gas detection instrument. As the Cyber transmitter, it is a component but it is covered by an ATEX certification. It is supposed to be mounted in an appropriate case, provided with power supply unit between 12V or 24V, and terminals for connection to the control panel.

The head's cable is potted in the stainless steel head. The wires are ending in a 2.54 mm female connector as follows (two connections are possible, based on the types of wiring connection):

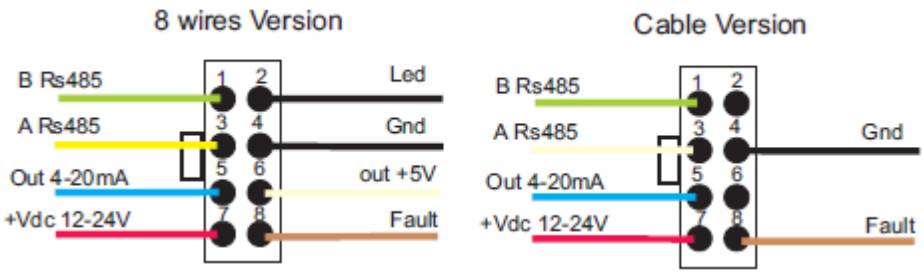

Figure 7.2. Cyber head connector connections.

Signals on the Cyber head wires version (left), according to the drawing above are :

1 - GREEN B RS485 - B connection to RS 485.
3 - YELLOW A RS485 - A connection to RS 485.
5 - BLUE OUT 4-20mA - Proportional current output 4-20mA (2).
7 - RED VDC (12-24V) - Power supply 12-24V(1).

2 - BLACK LED - LED output for an external LED of 5-10mA (3).
4 - BLACK GND - Ground connection.
6 - WHITE VCC (5.0V) - Voltage supply output (current limit 100mA).
8 - BROWN FAULT - TTL output. Normally “1”, goes to “0” in case of fault / under-scale / over-range.

Signals on the Cyber head cable version (right), according to the drawing above are :

1 - GREEN B RS485 - B connection to RS 485.
3 - WHITE A RS485 - A connection to RS 485.
5 - BLUE OUT 4-20mA - Proportional current output 4-20mA (2).
7 - RED VDC (12-24V) - Power supply 12-24V(1).

2 - NOT CONNECTED
4 - BLACK GND - Ground connection.
6 - NOT CONNECTED
8 - BROWN FAULT - TTL output. Normally “1”, goes to “0” in case of fault / under-scale / over-range.

8. Suggested connection diagrams

Connection with keypad

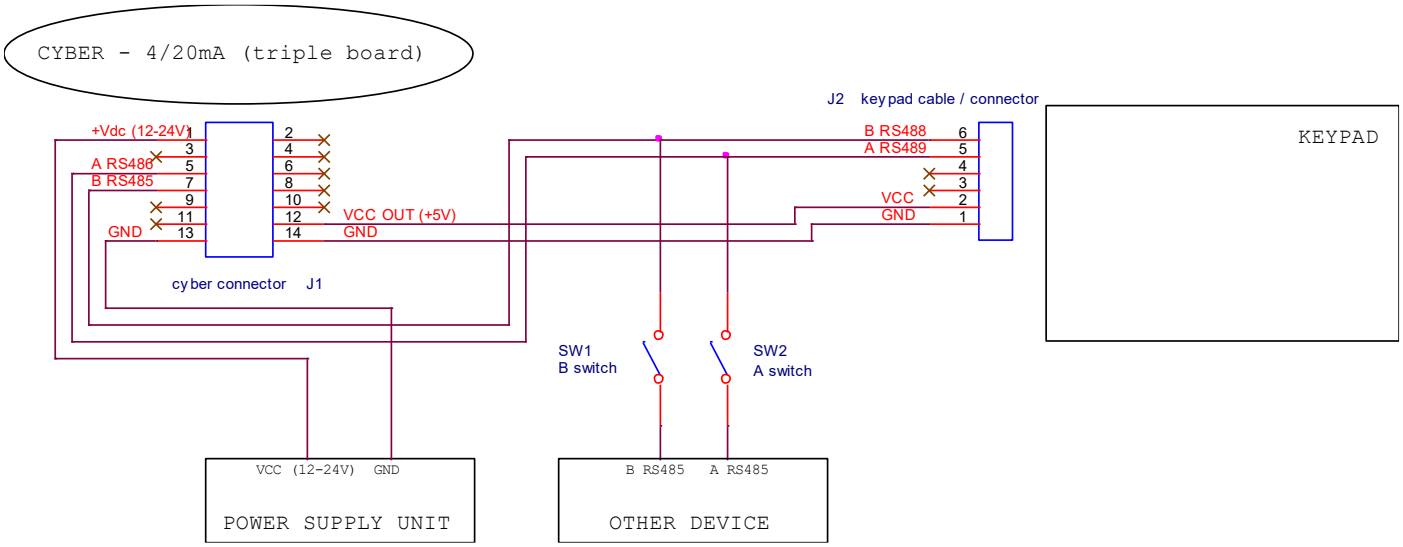

Cyber can supply +5V to keypad: use cyber's pin12 (+5V) and pin14 (GND) to supply current to keypad.
It is not mandatory to use +5V coming from the cyber. Any +5V/100mA (±5%) power supply can be used.
Ensure optimal connection of RS485 signals: connect cyber's pin5 to keypad's pin5 (keypad cable – green wire) and cyber's pin7 to keypad's pin6 (keypad cable – yellow wire).
Any connection with other communication device must be deactivated, for example using a switch.

Connections of the others pins of the cyber don't affect the operation of the keypad.
Pin3 and pin4 of keypad connector must be not connected.

9. Cyber 4-20mA Connection

Cyber board versions

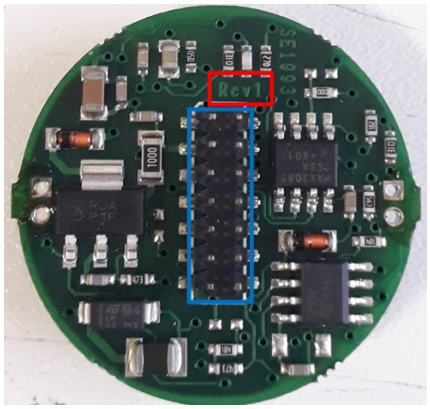

Fig. 9.1 New Cyber 4-20mA Board

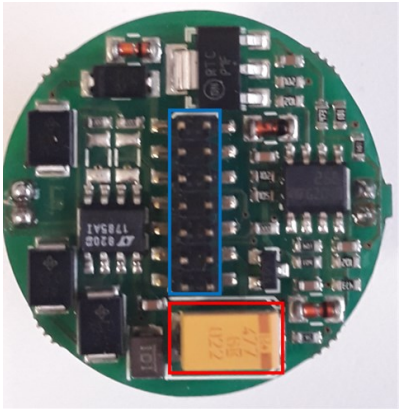

Fig. 9.2 Old Cyber 4-20mA Board

In case of new Cyber 4-20 mA board, please use central connector (blue square) and Rev1 silk-screen printing (red square) as reference.

In case of old Cyber 4-20 mA board, please use central connector (blue square) and yellow capacitor (red square) as reference.

Connection with calibration kit Board

Power on the calibration kit board with voltage inside the range 12V-24V, by connecting a voltage generator between pin 1 (+VCC (12-24V)) and pin 2 (GND) of MAIN connector (J7). Pay attention to the fact that the connectors on demo board are reserved for a particular device as shown in the picture below:

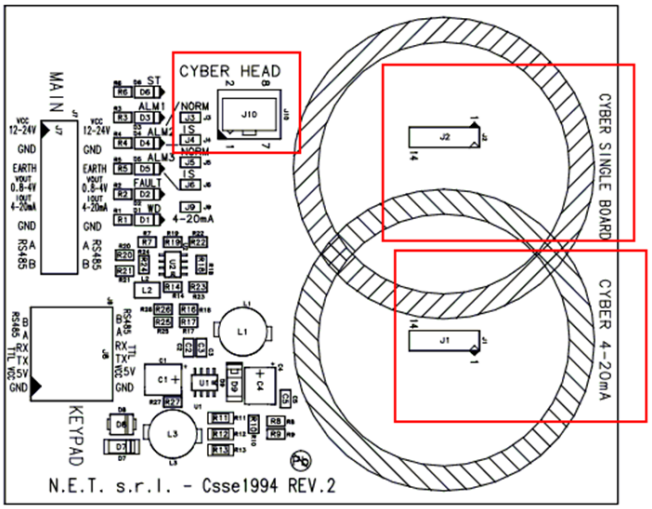

Fig. 9.3 Old Cyber 4-20mA Board

<u>New Cyber 4-20 mA board connection</u>
The board connector (blue square) shall be placed on J1 connector. The Rev1 silk-screen printing (red square) shall be mounted on side of PIN 1 of J1 connector.

<u>Old Cyber 4-20 mA board connection</u>
The board connector (blue square) shall be placed on J1 connector. The and yellow capacitor (red square) shall be mounted on side of PIN 14 of J1 connector.

Connection inside NET3 head

In picture below is show NET3 Head connector for 4-20mA boards.

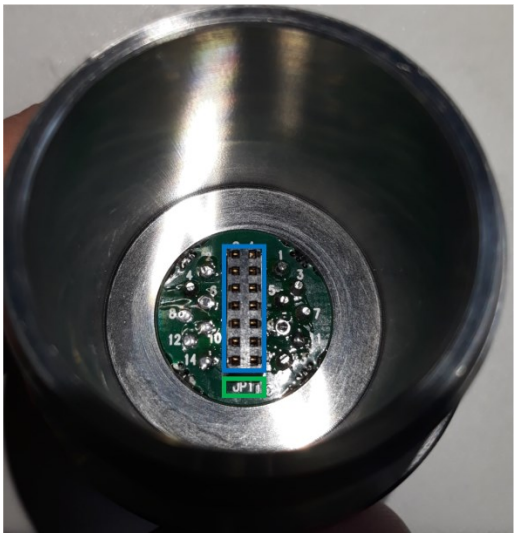

Fig. 9.4 NET3 Head connector

In case of NET3 Head, please use central connector (blue square) and JP1 silk-screen printing (green square) as reference.

New Cyber 4-20 mA board connection
The board connector (blue square) shall be placed on J1 connector. The Rev1 silk-screen printing (red square) shall be mounted *on opposite side* of JP1 silk-screen printing (green square).

Old Cyber 4-20 mA board connection
The board connector (blue square) shall be placed on J1 connector. The and yellow capacitor (red square) shall be mounted *on side* of JP1 silk-screen printing (green square).